Actisense®
Award Winning NMEA Specialists

AMI | MARINE

A2K-T-MFF

T Piece (Micro)

The Actisense NMEA 2000 T piece is for use where a drop or 'port' is required from the NMEA 2000 backbone to connect another device.

The quality engineered connectors are shaped to allow easy and secure connections, with two female and one male connector, even when field fit connectors are used, making it a totally unique T piece.

With two female and one male connector, the A2K-T-MFF can be easily connected to NMEA 2000 micro cable assemblies.

Colour	Pin	Name
Bare/Green	1	Shield
Red	2	NET-S
Black	3	NET-C
White	4	NET-H
Blue	5	NET-L

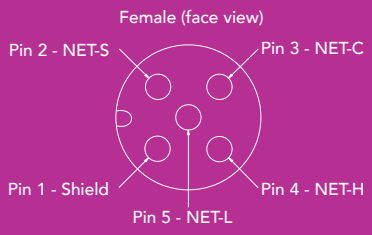

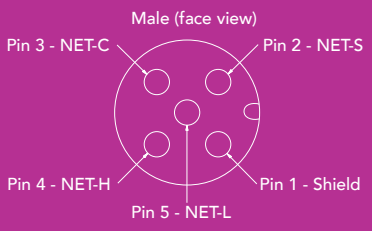

Product Dimensions.

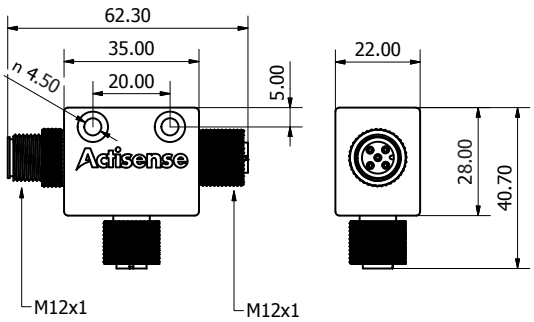

Product Specifications.

Mechanical	
Male Contact	Brass, gold plated
Female Contact	Phosphor bronze, gold plated
Contact Carrier	PBT, black
Contact Polarisation	Standard M12 -"A"- polarisation
Mating Thread	M12
Screw Cap	Brass, nickel plated
O-Ring Seal	Rubber
Housing	PVC, black
Weight	47g

Electrical	
Rated Current	4A
Rated Voltage	60V
Approvals and Certifications	
Protection	IP67 (when mated)
Operating Temperature	-20°C to +70°C
Storage Temperature	-40°C to +85°C
NMEA 2000 Certified	
RoHS Compliant	

Actisense® AMI | MARINE
t: +44(0)2380 480450
e: sales@amimarine.com
amimarine.com

Active Research Limited is registered in England, Company number: 3295909. VAT Registration number: GB 658 7968 55. **Actisense** from Active Research Limited